Installation & Operation Guide

AC EV Charger

D3E-D3P32E

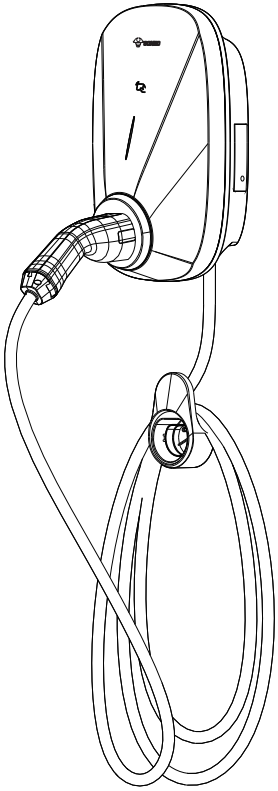

GONEO

Table of Contents

1. Safety **3**

1.1 General warnings 3

1.2 Installation safety 3

1.3 Environmental safety 3

1.4 Operating safety 4

1.5 Fire and overheating protection 4

1.6 Emergency situations 4

2. Mounting parts **5**

3. Product introduction **6**

4. Description of the EV charger **7**

5. Specifications **8**

6. Pre-Installation preparation **10**

6.1 Required material 10

6.2 Required tools 10

7. Installation **11**

7.1 Confirm grid type 11

7.2 Connect AC input cable 11

7.3 Connect RS485 cable and CT 12

7.4 Connect Ethernet cable 12

7.5 Secure the enclosure onto the wall 13

7.6 Install emergency stop devices 15

7.7 Install cable holder 16

8. Commissioning **18**

8.1 Residential scenario 18

8.2 Commercial scenario 18

9. Indicator **20**

11. Troubleshooting **22**

12. Routine maintenance **23**

13. Storage & transporation **23**

14. Disassembly **23**

15. Recycling & disposal **23**

About this manual

Thank you for choosing our EV charger.

This manual provides step-by-step instructions for the installation, operation, and maintenance of the charger.

The guide is for reference only and does not serve as a warranty of any kind. The actual product (including but not limited to color, size, and functions) may vary. If this guide is inconsistent with the description on the official website, the latter prevails.

Some functions may be subject to change, according to the charger's latest software updates.

Glossary of symbols & terms

Danger!

Indicates an imminently hazardous situation, which will result in death or serious bodily injury if the corresponding precautions are not taken.

Warning!

Indicates a potentially hazardous situation, which can result in death or serious bodily injury if the corresponding precautions are not taken.

Caution!

Means that if the corresponding safety measures are not taken, a potentially hazardous situation can occur that may result in slight bodily injury.

Caution!

Means that damage to property can occur if the corresponding safety measures are not taken.

Note!

A note gives more data or gives some tips, to make it easier to do the steps.

Term	Description
OCPP	Open Charge Point Protocol
SPD	Surge Protection Device
RCBO	Residual Current with Breaker Overcurrent Protection
PE	Protective Earth
IP55	Ingress Protection rating
CPMS	Charge point Management System
CB	Certification Body Scheme
CE	Conformité Européenne
RoSH	Restriction of Hazardous Substance
RFID	Radio Frequency Identification
EV	Electric Vehicle
AP mode	Access Point Mode
AC	Alterating Current
CT	Current Transformer
PIN	Personal Identification Number

1. Safety

IMPORTANT: Before installing or using this charger, please read this guide carefully to ensure safe and proper operation.
Installation must be carried out by a qualified electrician in accordance with local electrical regulations. The manufacturer is not responsible for damage or injury resulting from improper installation or use.
NOTE: Any damage to the charger or household electrical system caused by incorrect installation is the responsibility of the installer.

1.1 General warnings

- Installation, commissioning, and service must only be performed by qualified and licensed electricians, in accordance with local laws and regulations.
- The charger must only be used to charge compatible electric vehicles. Do not connect to any other device or equipment.
- Do not attempt to disassemble, repair, tamper with, or modify the charger. The unit is not user-serviceable. Contact authorized service personnel for any repairs.
- Improper installation or use may result in fire, electric shock, injury, or equipment damage.

1.2 Installation safety

- Disconnect all upstream power (circuit breaker/RCBO) before installation, maintenance, or cleaning.
- Ensure the installation surface is solid, flat, and capable of supporting the charger's weight.
- Mount the charger at the recommended installation height and provide sufficient clearance for ventilation and cable handling.
- Use only approved copper conductors of the correct cross-sectional area. Ensure all terminations are tightened to specified torque values.
- Do not coil, twist, weld, or extend cables improperly. Keep cables away from sharp edges and heat sources.
- Ensure proper grounding through a permanent wiring system or protective earth conductor.
- Install surge protection devices (SPD) if required by local regulations. Ensure the upstream breaker or emergency stop switch is clearly labeled and easily accessible.

1.3 Environmental safety

- Do not install or operate the charger near flammable, explosive, or corrosive materials, vapors, or steam.
- Do not install in areas with strong magnetic fields, wireless transmitters, or direct sunlight.

- Avoid locations exposed to flooding, heavy rain, or extreme weather beyond the charger's specified ratings.
- For indoor multi-charger installations, ensure adequate ventilation is provided.

1.4 Operating safety

- Always follow the instructions in the vehicle manufacturer's manual before charging.
- Ensure the vehicle is turned off before connecting or disconnecting the charging connector.
- Insert the charging connector fully and securely into the vehicle inlet before starting a charging session.
- Do not use the charger, cable, or connector if damaged, cracked, frayed, or malfunctioning.
- Never use the charger if the enclosure, connector, or cable shows signs of water ingress.
- Do not spray liquids onto the charger or submerge the connector in water.
- Do not handle the charger or connector with wet hands.
- Keep children and pets away from the charger and charging cable. Do not allow them to play near or with the equipment.
- Arrange charging cables to prevent tripping hazards or obstruction.
- Handle the charger and cable with care. Do not drop, step on, crush, fold, or apply pressure with sharp objects.
- Store the charging connector in its holster when not in use to avoid contamination or moisture ingress.
- Radio waves from the charger may interfere with implanted medical devices such as pacemakers, cochlear implants, and hearing aids. Consult your medical device manufacturer before use.

1.5 Fire and overheating protection

- Do not cover or obstruct the charger during operation.
- Stop using the charger immediately if you notice smoke, unusual smells, sparks, or excessive heat. Disconnect power from the upstream breaker or emergency stop switch and contact service personnel.
- Do not exceed the rated load capacity of the charger or site electrical system.

1.6 Emergency situations

In case of fire, smoke, or electric shock:

- Immediately stop charging using the vehicle controls or emergency stop switch.
- Disconnect power at the upstream breaker if safe to do so.
- Evacuate the area and contact emergency services.
- If the charger has been submerged, struck by lightning, or physically damaged (e.g., by vehicle impact), do not use it until inspected and approved by qualified service personnel.

2. Mounting parts

Upon receipt of the product, please verify the accessories against the list below. If any items are missing, contact us immediately.

Item	Icon	Quantity
M4*32mm screw		7
Wall plug		7
Wire ferrule		5
Cable clip	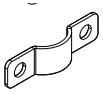	1
M3*12 screw		2
Cable holder		1
Installation & operation manual		1
RFID card		2
PIN code label		1
QR code sticker		1
Emergency stop		1
AC contactor		1

3. Product introduction

The D3E-D3P32E AC EV Charger is a versatile, high-performance charging solution designed for both residential and commercial applications. With a maximum output of 22 kW (three-phase, Mode 3), it delivers rapid and efficient charging for electric vehicles while ensuring safety, reliability, and user convenience.

Key fearures include:

- **High-Power 22kW charging:** With 22kW charging capacity, this charger provides rapid charging for electric vehicles, ensuring a fast and efficient charging experience for both residential and commercial users.
- **Flexible connectivity options:** Supports Ethernet and Wi-Fi, Providing versatile connectivity for seamless communication, remote monitoring, and control. Idal for both home and business environments where reliable internet access is key.
- I**ntutive LED status indicator:** The LED indicator provides real-time status updates, including charging progress and potential issues, offering clear and immediate feedback to users.
- **Multiple charging modes:** Offers a variety of charging modes to suit different needs, whether for fast charging or energy-efficient usage.
- **Comprehensive charging protection:** Built-in safety mechanisms such as overcurrent protection, short-circuit detection, and overvoltage protection ensure the safety of both the charger and the connected devices, protecting against potential hazards.
- **Compact design:** Lightweight, designed for easy transport and space-saving in any environment.
- **Dynamic load balancing:** The charger has a Dynamic Load Balancing capability which is designed to prevent overloads of the property's power supply when electric vehicles are being charged.

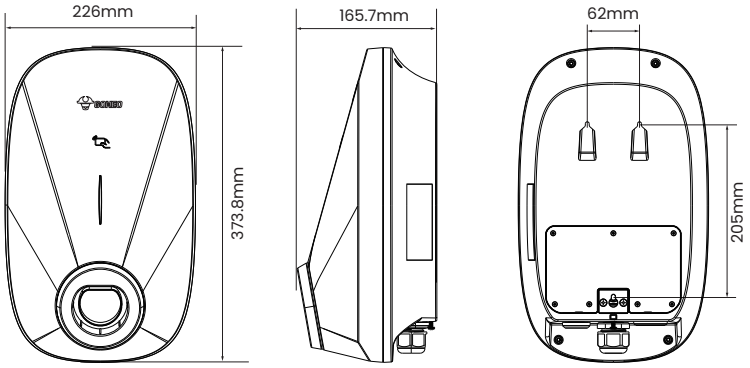

4. Description of the EV charger

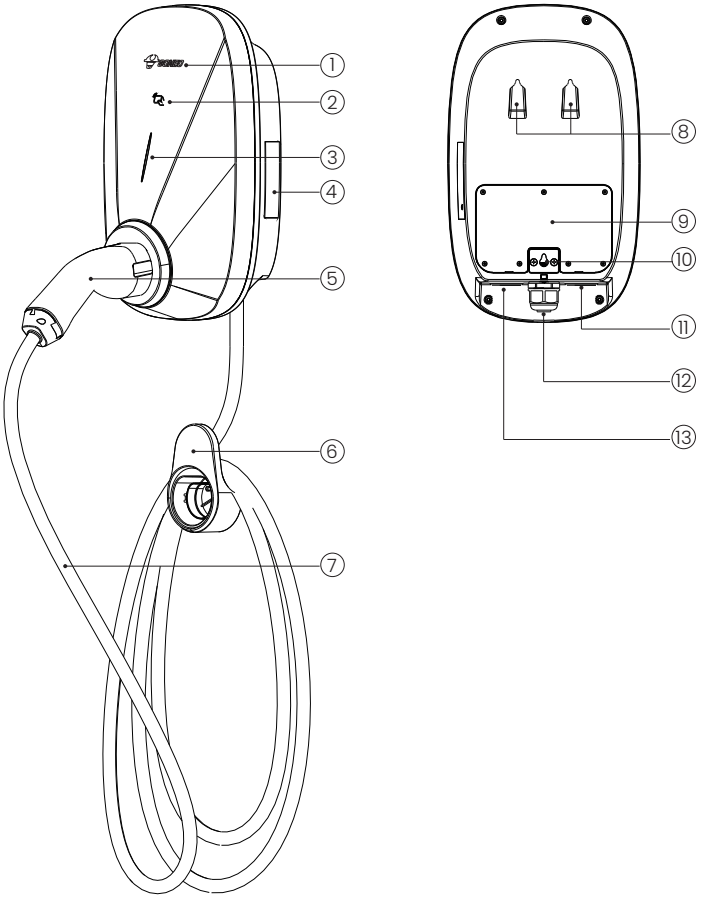

1. Logo
2. RFID reader
3. LED indicator
4. Reset button
5. Charging connector
6. Cable holder
7. Charging cable
8. Mounting recess
9. Access cover
10. Mounting hole
11. AC input cable inlet
12. Charging cable inlet
13. Communication cable inlet

5. Specifications

Model	D3E-D3P32E
Power supply	3P+N+PE
Rated voltage	400V AC
Rated current	32A
Frequency	50/60 Hz
Rated power	22kW
Charging mode	Mode 3
Charge connector	Type 2 Cable
Cable length	7m
Enclosure	PC
Installation	Wall-mounted/Pedestal-mounted (optional)
LED indicator	Green/Yellow/Red
Wi-Fi	Frequency Bandwidth:802.11 b/g/n 2.4 GHz (2412-2472 MHZ) Max RF Output Power:<20dBm (-10dBW)
Ethernet	Support
Bluetooth	Bluetooth Low Energy (BLE 4.2)
OCPP	OCPP 1.6 Json
Applicable scenario	Indoor /Outdoor
Working temperature	-30°C to +50°C
Working humidity	5%~95%
Working altitude	<2000m
Pollution degree	PD3
RCD	30mA Type A + 6mA DC
IP rating	IP65
Impact protection	IK10
Electrical protection	Over current protection Residual current protection Surge protection Over/Under voltage protection Over/Under frequency protection Over temperature protection
Certification	TR25, RoHs

EMC class	Class B	
Type of protection Against electric shock	Class I equipment	
Grounding support	TN/ TT/IT(optional)	
Standard compliance	TR25	TR25-1:2022
	Rohs	IEC 62321
Warranty	2 Years	

6. Pre-Installation preparation

6.1 Required material

Item	Specification
AC input cable	Operating current: 32A Cross section area: 6mm^2
RJ45 connector	Standard
Ethernet cable	Cat 5e or higher, CSA: 0.2 ~0.25mm^2
RCBO	4P RCBO, C40, 40 A (50 A is recommended if the ambient temperature is higher than 45°C), Type A, in compliance with local regulations.
RS485 cable	22 to 24AWG shielded twisted pair

6.2 Required tools

Tools	Specification
Tape measure	5m
Marking tool	Pencil
Level	Standard
Philips screwdriver	PH2
Hammer	Standard
Drill	Drill bit: Φ6mm
Wire stripper	6mm^2
Crimpling tool	6mm^2
Digital multimeter	Standard
Voltage test	Standard

7. Installation

7.1 Confirm grid type

TN and TT systems are configured with neutral conductors. IT systems do not have neutral conductors.

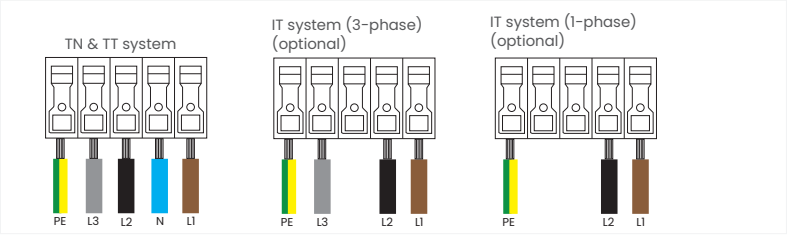

7.2 Connect AC input cable

Disconnect the upstream power before wiring.

- With wire ferrules

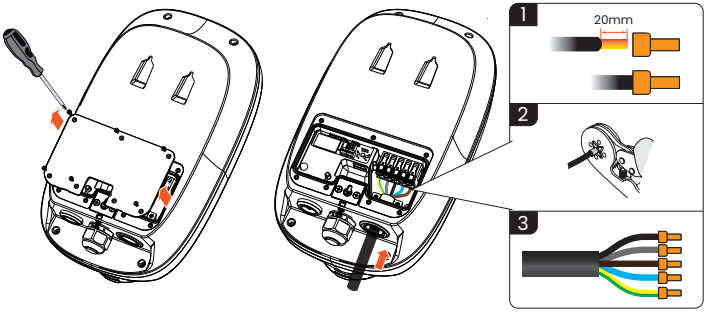

- Without wire ferrules

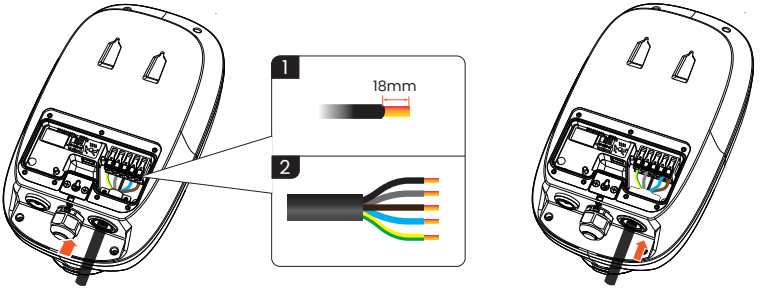

7.3 Connect RS485 cable and CT

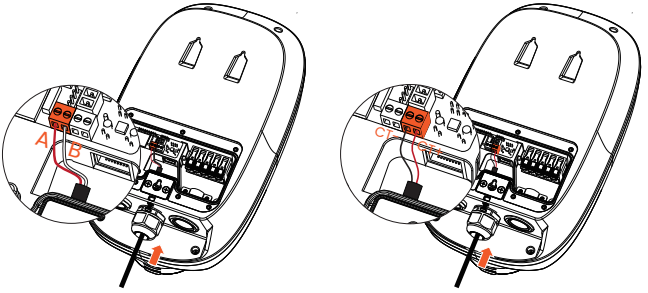

- Please be aware that the CT ports will function only when the charger is operating in a single-phase mode, and you also intended to achieve load balancing and utilize photovoltaic(PV) charging.
- CT is sold separately.

7.4 Connect Ethernet cable

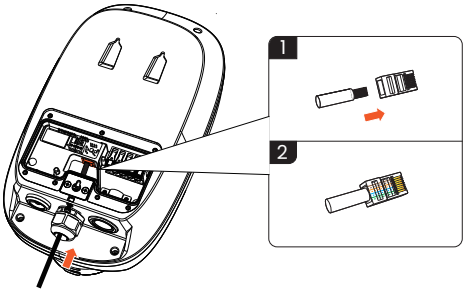

7.5 Secure the enclosure onto the wall

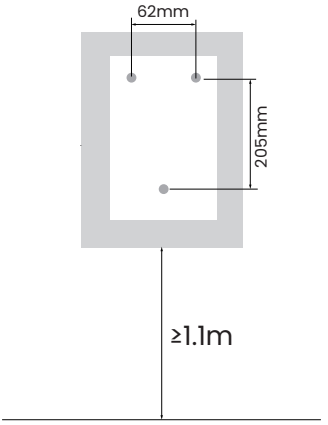

Use the drilling template provided in the package.

Align the template on the wall at a height of ≥1.1 meters from the ground.

Mark the positions of the three mounting holes using a marker or pencil.

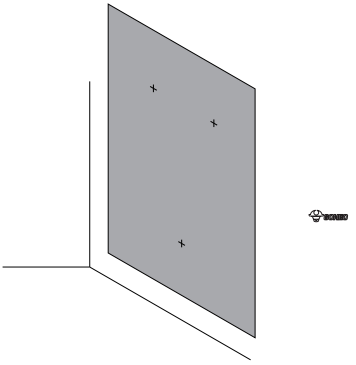

Use an 6mm diameter drill bit to drill three holes, each 35mm deep, at the marked locations.

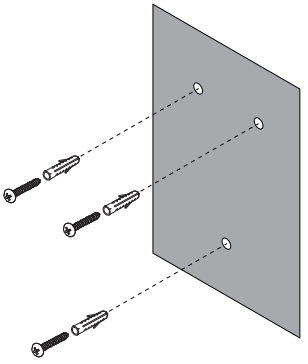

Insert three wall plugs into the drilled holes.

Insert three M4*32 screws into the three wall plugs.

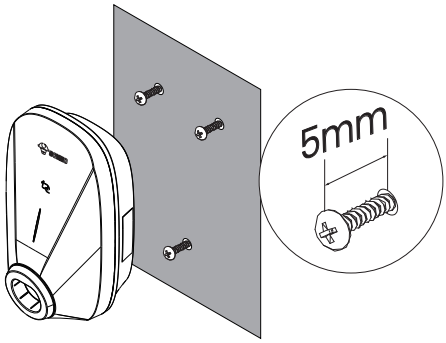

Leave a 5mm gap between the heads of the screws and the wall.

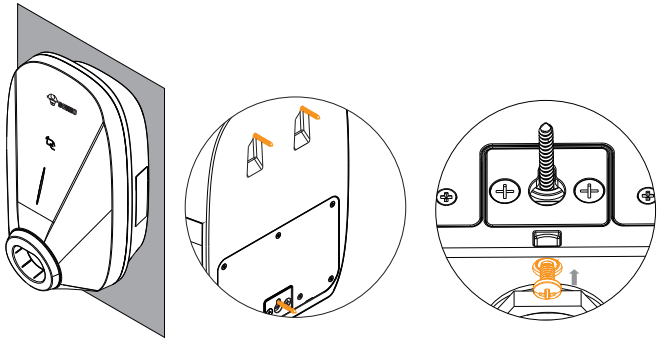

Mount the charger by fitting the protruding screws into the mounting recesses and mounting hole on its back.

Firmly tighten the bottom screw to lock the charger securely in position.

7.6 Install emergency stop devices

The emergency stop is composed of emergency stop button and AC contatctor. Please connect the wires as shown below.

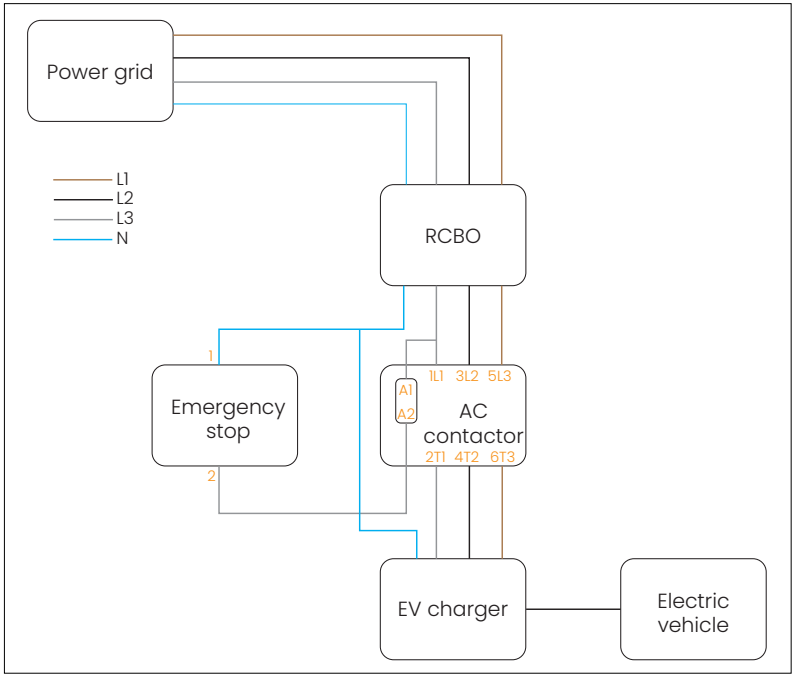

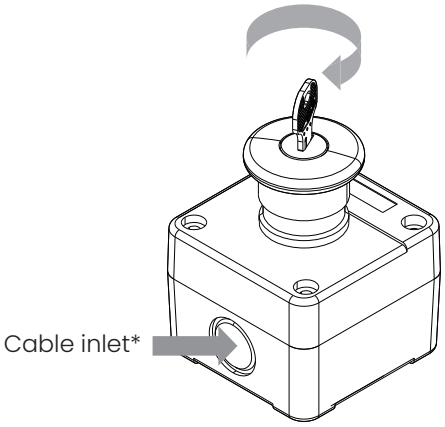

This device has cable entry at front, rear, and bottom. You can open the entry as needed for installation. The emergency stop button is normally in the released (up) position. In case of emergency, it must be pressed down. After the emergency situation is resolved, insert the key into the key slot and turn it clockwise to reset the emergency stop button.

7.7 Install cable holder

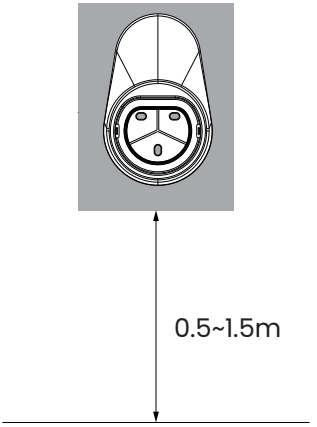

Choose a location 0.5–1.5 meters above ground and close to the charger for convenience.

Hold the cable holder against the wall.

Use a pencil to mark the three fixing holes.

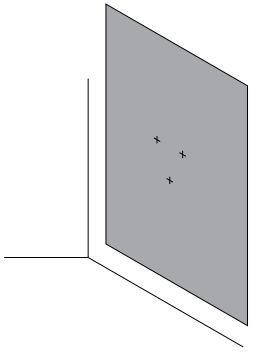

Use an 6mm diameter drill bit to drill three holes, each 35mm deep, at the marked locations.

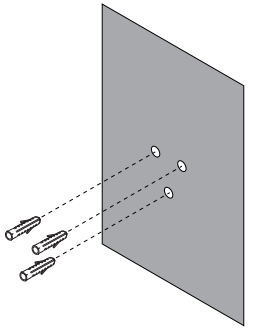

Insert three wall plugs into the drilled holes.

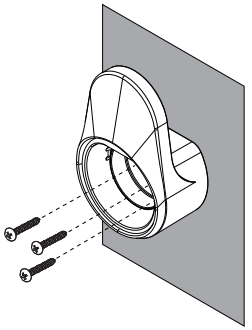

Align holes in the cable hoder with the ones on the wall.
Secure it using three M4*32mm screws to complete the holder installation.

M4: 0.6~1.2 N.m

8. Commissioning

The commissioning are different based on the scenario your charger used:

- Residential scenario: Evchargo App
  - If in residential scenario, you want to connect the charger to a 3rd party's platform, and use a 3rd party's App to charge EV, then AP mode will be used.
- Commercial scenario: AP mode
  - You need to configure the charger in Evchargo platform.

8.1 Residential scenario

For the installer, you can download and install Evchargo App, and after completing all necessary configurations, you can transfer the ownership to the user. The user then simply install the App and log in to easily control the charging process with the App.

8.1.1 App download & installation

Download and install the latest app on your smartphone.

Follow the instructions on the app to complete wizard settings and parameter settings.

App download

App quick start guide

8.2 Commercial scenario

8.2.1 Paste QR code

Paste the QR code sticker on the charger's exterior allows users to starting charging by simply scanning the code.

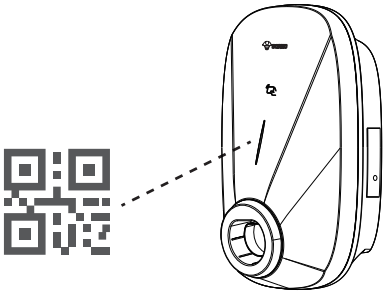

Scan the QR code located on the charger body.

For your first charger: Add a bank card and authorize payment in the system.

Once completed, you can begin charging immediately.

8.2.2 AP mode

Scan the QR code below for the operation details of the AP mode.

8.2.3 Evchargo cloud platform

After completing the network settings, your charger is now able to communicate with the cloud platform. However, further configuration on the platform is required. This includes:

- Creating a charge station
- Linking your charger to the station
- Setting the payment channel
- Defining the charging price.

Once these steps are completed, end users will be able to use the charger with ease.

Before configuration, you need to prepare the following information:

- Company's address
- Bank account information
- Charger's serial number (ID)
- Email address
- Service hotline

Scan QR code below for platform setup guide:

Instructions for Evchargo Cloud

9. Indicator

Indicator color	Indicator status	Charger status
Green	Cycle: flash slowly (on for 1s then off for 3s)	Charger standby
	Cycle: flash green twice (on for 200ms and off for 1000ms), then off for 3000ms	Charger started successfully, and wait for EV's response
	Cycle: flash green five times (on for 200ms and off for 1000ms), then off for 3000ms	Charging connector plugged in
	Fade in and out at interval of 1s	Charging in progress
	Steady green	Charging ended
Yellow	Steady yellow	Warnings
	Cycle: flash yellow five times (on for 200ms and off for 1000ms), then off for 3000ms.	Insufficient power allocated, charging suspended
	Cycle: flash yellow for up to five times (on for 100ms and off for 100ms).	Successful card swiping
	Cycle: flash green and flash yellow alternately for 1s then off for 3s	No network/Not connected to the server
Red+ Yellow	Flash red/Steady red Flash red and yellow	Faulty
White	Fade in and out at intervals of 1s	Self-test upon power on
	Cycle: flash white five times (on for 200ms and off for 1000ms), then off for 5000ms	Firmware upgrading

10. Charger usage

Read the installation precautions before using the product.

Ensure that the charger is not cracked or damaged.

Ensure that there is no liquid or other foreign matter on the charging connector or inside the charging port of the vehicle.

The following shows how to start a charging session by tapping the card. For details about other charging modes, see the charger app.

10.2.1 Charging via RFID card

Charger status	Indicator status
Plug in the charging connector	The indicator flashes green quickly for five times.
Tap card	The indicator flashes yellow quickly for up to five times
During charging	The green indicator fades in and out at interval of 1s
Fully charged	Steady green

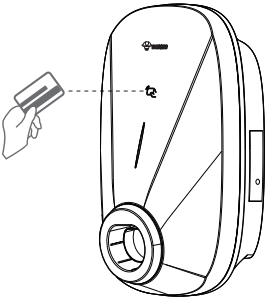

11. Troubleshooting

Indicator color	Charger status	Indicator status
Red	Relay adhesion	Steady red
	Leakage current	Cycle: flash red once then off for 3s
	CP fault	Cycle: flash red twice then off for 3s
	Over current	Cycle: flash red three times then off for 3s
	Input wires are connected reversely	Cycle: flash red four times then off for 3s
	Leakage current loop is abnormal	Cycle: flash red five times then off for 3s
	Input terminals over temperature	Cycle: flash red six times then off for 3s
	Relay over temperature	Cycle: flash red seven times then off for 3s
Red + Yellow	Over/under voltage	Cycle: stay yellow for 2s then flash red once then off for 3s
	Over/under frequency	Cycle: stay yellow for 2s then flash red twice then off for 3s
	Meter communication is abnormal	Cycle: stay yellow for 2s then flash red three times then off for 3s
	Smart Meter communication is abnormal	Cycle: stay yellow for 2s then flash red four times then off for 3s
	Charging connector lock abnormal	Cycle: stay yellow for 2s then flash red six times then off for 3s
	Charging connector current abnormal	Cycle: stay yellow for 2s then flash red seven times then off for 3s
White	BOOT security verification failed or the security chip failure	Cycle: flash twice (on for 200ms and off for 1000ms for) then off for 5000ms

12. Routine maintenance

- Chargers do not need special maintenance. You are advised to check and clean the enclosure of the charger and accessories such as the charging connector every six months.
- Check whether the charger and cables are damaged.
- Use a dry cloth to clean the surface of the charger. Do not spray water directly on the charger.



Do not use corrosive cleaners, glass cleaners, or organic solvents.

13. Storage & transporation

- Chargers should be transported in the original packages. Do not place other objects on the top of the charger.
- Before transportation, store the product in a clean, dry, and well ventilated place with a relative humidity of not more than 80% and free from corrosive gases.
- The environmental specifications for storage and transportation shall not go beyond those specified in the Technical Specifications.

14. Disassembly

- Only authorized and qualified electricians are allowed to disassemble the product.
- Power off the charger before disassembling it.
- Disassemble a charger in the reverse order of installation.

15. Recycling & disposal



This product should not be disposed of with general household waste. It contains electronic components and metals that may be harmful to the environment.

Please follow these steps:

- Contact your local municipality or recycling center for EV charger disposal instructions.
- Remove the device by a certified professional before recycling.
- Do not burn, crush, or disassemble the charger.

PIN